8.1 INTCON Registers

The INTCON Registers are readable and writable registers, which contain various enable, priority and flag bits.

> **Note:** Interrupt flag bits are set when an interrupt condition occurs, regardless of the state of its corresponding enable bit or the global enable bit. User software should ensure the appropriate interrupt flag bits are clear prior to enabling an interrupt. This feature allows for software polling.

REGISTER 8-1: INTCON REGISTER

R/W-0	R/W-0	R/W-0	R/W-0	R/W-0	R/W-0	R/W-0	R/W-x
GIE/GIEH	PEIE/GIEL	TMR0IE	INT0IE	RBIE	TMR0IF	INT0IF	RBIF
bit 7							bit 0

bit 7 **GIE/GIEH:** Global Interrupt Enable bit
When IPEN = 0:
1 = Enables all unmasked interrupts
0 = Disables all interrupts
When IPEN = 1:
1 = Enables all high priority interrupts
0 = Disables all interrupts

bit 6 **PEIE/GIEL:** Peripheral Interrupt Enable bit
When IPEN = 0:
1 = Enables all unmasked peripheral interrupts
0 = Disables all peripheral interrupts
When IPEN = 1:
1 = Enables all low priority peripheral interrupts
0 = Disables all low priority peripheral interrupts

bit 5 **TMR0IE:** TMR0 Overflow Interrupt Enable bit
1 = Enables the TMR0 overflow interrupt
0 = Disables the TMR0 overflow interrupt

bit 4 **INT0IE:** INT0 External Interrupt Enable bit
1 = Enables the INT0 external interrupt
0 = Disables the INT0 external interrupt

bit 3 **RBIE:** RB Port Change Interrupt Enable bit
1 = Enables the RB port change interrupt
0 = Disables the RB port change interrupt

bit 2 **TMR0IF:** TMR0 Overflow Interrupt Flag bit
1 = TMR0 register has overflowed (must be cleared in software)
0 = TMR0 register did not overflow

bit 1 **INT0IF:** INT0 External Interrupt Flag bit
1 = The INT0 external interrupt occurred (must be cleared in software)
0 = The INT0 external interrupt did not occur

bit 0 **RBIF:** RB Port Change Interrupt Flag bit
1 = At least one of the RB7:RB4 pins changed state (must be cleared in software)
0 = None of the RB7:RB4 pins have changed state

Note: A mismatch condition will continue to set this bit. Reading PORTB will end the mismatch condition and allow the bit to be cleared.

Legend:			
R = Readable bit	W = Writable bit	U = Unimplemented bit, read as ‘0’	
- n = Value at POR	’1’ = Bit is set	’0’ = Bit is cleared	x = Bit is unknown

REGISTER 8-2: INTCON2 REGISTER

R/W-1	R/W-1	R/W-1	R/W-1	U-0	R/W-1	U-0	R/W-1
RBPU	INTEDG0	INTEDG1	INTEDG2	—	TMR0IP	—	RBIP
bit 7							bit 0

bit 7 **$\overline{\text{RBPU}}$**: PORTB Pull-up Enable bit
1 = All PORTB pull-ups are disabled
0 = PORTB pull-ups are enabled by individual port latch values

bit 6 **INTEDG0**:External Interrupt0 Edge Select bit
1 = Interrupt on rising edge
0 = Interrupt on falling edge

bit 5 **INTEDG1**: External Interrupt1 Edge Select bit
1 = Interrupt on rising edge
0 = Interrupt on falling edge

bit 4 **INTEDG2**: External Interrupt2 Edge Select bit
1 = Interrupt on rising edge
0 = Interrupt on falling edge

bit 3 **Unimplemented:** Read as '0'

bit 2 **TMR0IP**: TMR0 Overflow Interrupt Priority bit
1 = High priority
0 = Low priority

bit 1 **Unimplemented:** Read as '0'

bit 0 **RBIP**: RB Port Change Interrupt Priority bit
1 = High priority
0 = Low priority

Legend:			
R = Readable bit	W = Writable bit	U = Unimplemented bit, read as ‘0’	
- n = Value at POR	’1’ = Bit is set	’0’ = Bit is cleared	x = Bit is unknown

Note: Interrupt flag bits are set when an interrupt condition occurs, regardless of the state of its corresponding enable bit or the global enable bit. User software should ensure the appropriate interrupt flag bits are clear prior to enabling an interrupt. This feature allows for software polling.

© 2002 Microchip Technology Inc.

REGISTER 8-3: INTCON3 REGISTER

R/W-1	R/W-1	U-0	R/W-0	R/W-0	U-0	R/W-0	R/W-0
INT2IP	INT1IP	—	INT2IE	INT1IE	—	INT2IF	INT1IF
bit 7							bit 0

bit 7 **INT2IP:** INT2 External Interrupt Priority bit
1 = High priority
0 = Low priority

bit 6 **INT1IP:** INT1 External Interrupt Priority bit
1 = High priority
0 = Low priority

bit 5 **Unimplemented:** Read as '0'

bit 4 **INT2IE:** INT2 External Interrupt Enable bit
1 = Enables the INT2 external interrupt
0 = Disables the INT2 external interrupt

bit 3 **INT1IE:** INT1 External Interrupt Enable bit
1 = Enables the INT1 external interrupt
0 = Disables the INT1 external interrupt

bit 2 **Unimplemented:** Read as '0'

bit 1 **INT2IF:** INT2 External Interrupt Flag bit
1 = The INT2 external interrupt occurred (must be cleared in software)
0 = The INT2 external interrupt did not occur

bit 0 **INT1IF:** INT1 External Interrupt Flag bit
1 = The INT1 external interrupt occurred (must be cleared in software)
0 = The INT1 external interrupt did not occur

Legend:			
R = Readable bit	W = Writable bit	U = Unimplemented bit, read as ‘0’	
- n = Value at POR	’1’ = Bit is set	’0’ = Bit is cleared	x = Bit is unknown

Note: Interrupt flag bits are set when an interrupt condition occurs, regardless of the state of its corresponding enable bit or the global enable bit. User software should ensure the appropriate interrupt flag bits are clear prior to enabling an interrupt. This feature allows for software polling.

10.0 TIMER0 MODULE

The Timer0 module has the following features:

- Software selectable as an 8-bit or 16-bit timer/counter
- Readable and writable
- Dedicated 8-bit software programmable prescaler
- Clock source selectable to be external or internal
- Interrupt-on-overflow from FFh to 00h in 8-bit mode and FFFFh to 0000h in 16-bit mode
- Edge select for external clock

Figure 10-1 shows a simplified block diagram of the Timer0 module in 8-bit mode and Figure 10-2 shows a simplified block diagram of the Timer0 module in 16-bit mode.

The T0CON register (Register 10-1) is a readable and writable register that controls all the aspects of Timer0, including the prescale selection.

REGISTER 10-1: T0CON: TIMER0 CONTROL REGISTER

R/W-1	R/W-1	R/W-1	R/W-1	R/W-1	R/W-1	R/W-1	R/W-1
TMR0ON	T08BIT	T0CS	T0SE	PSA	T0PS2	T0PS1	T0PS0
bit 7							bit 0

bit 7 **TMR0ON:** Timer0 On/Off Control bit
`1` = Enables Timer0
`0` = Stops Timer0

bit 6 **T08BIT**: Timer0 8-bit/16-bit Control bit
`1` = Timer0 is configured as an 8-bit timer/counter
`0` = Timer0 is configured as a 16-bit timer/counter

bit 5 **T0CS**: Timer0 Clock Source Select bit
`1` = Transition on T0CKI pin
`0` = Internal instruction cycle clock (CLKO)

bit 4 **T0SE**: Timer0 Source Edge Select bit
`1` = Increment on high-to-low transition on T0CKI pin
`0` = Increment on low-to-high transition on T0CKI pin

bit 3 **PSA**: Timer0 Prescaler Assignment bit
`1` = TImer0 prescaler is NOT assigned. Timer0 clock input bypasses prescaler.
`0` = Timer0 prescaler is assigned. Timer0 clock input comes from prescaler output.

bit 2-0 **T0PS2:T0PS0**: Timer0 Prescaler Select bits
`111` = 1:256 prescale value
`110` = 1:128 prescale value
`101` = 1:64 prescale value
`100` = 1:32 prescale value
`011` = 1:16 prescale value
`010` = 1:8 prescale value
`001` = 1:4 prescale value
`000` = 1:2 prescale value

Legend:			
R = Readable bit	W = Writable bit	U = Unimplemented bit, read as ‘0’	
- n = Value at POR	’1’ = Bit is set	’0’ = Bit is cleared	x = Bit is unknown

FIGURE 10-1: TIMER0 BLOCK DIAGRAM IN 8-BIT MODE

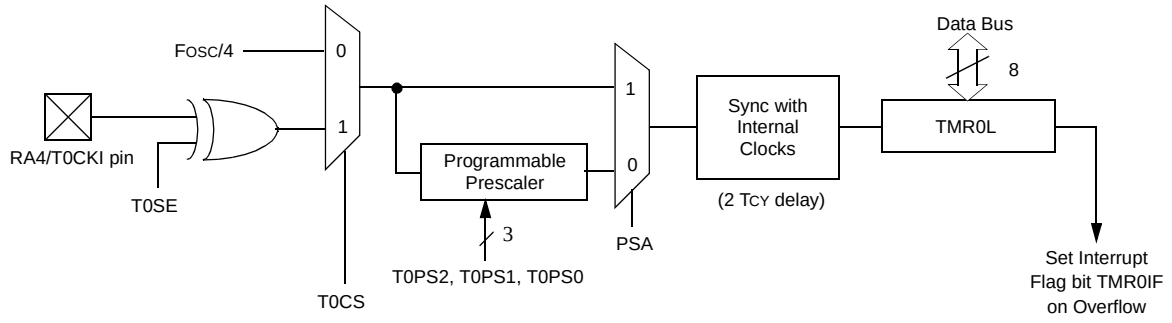

Note: Upon RESET, Timer0 is enabled in 8-bit mode with clock input from T0CKI max. prescale.

FIGURE 10-2: TIMER0 BLOCK DIAGRAM IN 16-BIT MODE

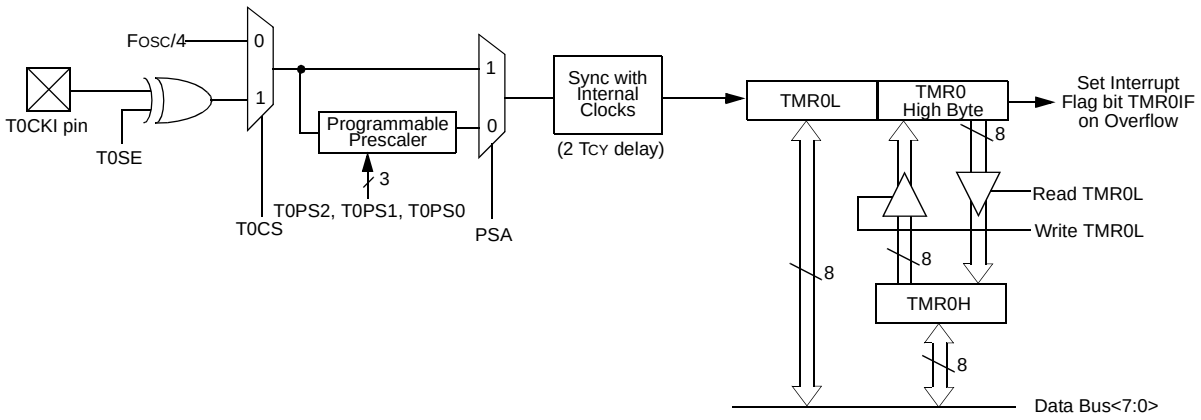

Note: Upon RESET, Timer0 is enabled in 8-bit mode with clock input from T0CKI max. prescale.

TABLE 10-1: REGISTERS ASSOCIATED WITH TIMER0

Name	Bit 7	Bit 6	Bit 5	Bit 4	Bit 3	Bit 2	Bit 1	Bit 0	Value on POR, BOR	Value on All Other RESETS
TMR0L	Timer0 Module Low Byte Register								xxxx xxxx	uuuu uuuu
TMR0H	Timer0 Module High Byte Register								0000 0000	0000 0000
INTCON	GIE/GIEH	PEIE/GIEL	TMR0IE	INT0IE	RBIE	TMR0IF	INT0IF	RBIF	0000 000x	0000 000u
T0CON	TMR0ON	T08BIT	T0CS	T0SE	PSA	T0PS2	T0PS1	T0PS0	1111 1111	1111 1111
TRISA	—	PORTA Data Direction Register							-111 1111	-111 1111

Legend: x = unknown, u = unchanged, - = unimplemented locations read as '0'. Shaded cells are not used by Timer0.

© 2002 Microchip Technology Inc.

17.0 COMPATIBLE 10-BIT ANALOG-TO-DIGITAL CONVERTER (A/D) MODULE

The Analog-to-Digital (A/D) converter module has five inputs for the PIC18F2X2 devices and eight for the PIC18F4X2 devices. This module has the ADCON0 and ADCON1 register definitions that are compatible with the mid-range A/D module.

The A/D allows conversion of an analog input signal to a corresponding 10-bit digital number.

The A/D module has four registers. These registers are:

- A/D Result High Register (ADRESH)
- A/D Result Low Register (ADRESL)
- A/D Control Register 0 (ADCON0)
- A/D Control Register 1 (ADCON1)

The ADCON0 register, shown in Register 17-1, controls the operation of the A/D module. The ADCON1 register, shown in Register 17-2, configures the functions of the port pins.

REGISTER 17-1: ADCON0 REGISTER

R/W-0	R/W-0	R/W-0	R/W-0	R/W-0	R/W-0	U-0	R/W-0
ADCS1	ADCS0	CHS2	CHS1	CHS0	GO/$\overline{\text{DONE}}$	—	ADON
bit 7							bit 0

bit 7-6 **ADCS1:ADCS0:** A/D Conversion Clock Select bits (ADCON0 bits in **bold**)

ADCON1 <ADCS2>	ADCON0 <ADCS1:ADCS0>	Clock Conversion
0	**00**	FOSC/2
0	**01**	FOSC/8
0	**10**	FOSC/32
0	**11**	FRC (clock derived from the internal A/D RC oscillator)
1	**00**	FOSC/4
1	**01**	FOSC/16
1	**10**	FOSC/64
1	**11**	FRC (clock derived from the internal A/D RC oscillator)

bit 5-3 **CHS2:CHS0:** Analog Channel Select bits
000 = channel 0, (AN0)
001 = channel 1, (AN1)
010 = channel 2, (AN2)
011 = channel 3, (AN3)
100 = channel 4, (AN4)
101 = channel 5, (AN5)
110 = channel 6, (AN6)
111 = channel 7, (AN7)

Note: The PIC18F2X2 devices do not implement the full 8 A/D channels; the unimplemented selections are reserved. Do not select any unimplemented channel.

bit 2 **GO/$\overline{\text{DONE}}$:** A/D Conversion Status bit
When ADON = 1:
1 = A/D conversion in progress (setting this bit starts the A/D conversion which is automatically cleared by hardware when the A/D conversion is complete)
0 = A/D conversion not in progress

bit 1 **Unimplemented:** Read as '0'

bit 0 **ADON:** A/D On bit
1 = A/D converter module is powered up
0 = A/D converter module is shut-off and consumes no operating current

Legend:			
R = Readable bit	W = Writable bit	U = Unimplemented bit, read as ‘0’	
- n = Value at POR	’1’ = Bit is set	’0’ = Bit is cleared	x = Bit is unknown

REGISTER 17-2: ADCON1 REGISTER

R/W-0	R/W-0	U-0	U-0	R/W-0	R/W-0	R/W-0	R/W-0
ADFM	ADCS2	—	—	PCFG3	PCFG2	PCFG1	PCFG0
bit 7							bit 0

bit 7 **ADFM:** A/D Result Format Select bit
1 = Right justified. Six (6) Most Significant bits of ADRESH are read as ’0’.
0 = Left justified. Six (6) Least Significant bits of ADRESL are read as ’0’.

bit 6 **ADCS2:** A/D Conversion Clock Select bit (ADCON1 bits in **bold**)

ADCON1 <ADCS2>	ADCON0 <ADCS1:ADCS0>	Clock Conversion
0	00	FOSC/2
0	01	FOSC/8
0	10	FOSC/32
0	11	FRC (clock derived from the internal A/D RC oscillator)
1	00	FOSC/4
1	01	FOSC/16
1	10	FOSC/64
1	11	FRC (clock derived from the internal A/D RC oscillator)

bit 5-4 **Unimplemented:** Read as '0'

bit 3-0 **PCFG3:PCFG0:** A/D Port Configuration Control bits

PCFG <3:0>	AN7	AN6	AN5	AN4	AN3	AN2	AN1	AN0	VREF+	VREF-	C / R
0000	A	A	A	A	A	A	A	A	VDD	VSS	8 / 0
0001	A	A	A	A	VREF+	A	A	A	AN3	VSS	7 / 1
0010	D	D	D	A	A	A	A	A	VDD	VSS	5 / 0
0011	D	D	D	A	VREF+	A	A	A	AN3	VSS	4 / 1
0100	D	D	D	D	A	D	A	A	VDD	VSS	3 / 0
0101	D	D	D	D	VREF+	D	A	A	AN3	VSS	2 / 1
011x	D	D	D	D	D	D	D	D	—	—	0 / 0
1000	A	A	A	A	VREF+	VREF-	A	A	AN3	AN2	6 / 2
1001	D	D	A	A	A	A	A	A	VDD	VSS	6 / 0
1010	D	D	A	A	VREF+	A	A	A	AN3	VSS	5 / 1
1011	D	D	A	A	VREF+	VREF-	A	A	AN3	AN2	4 / 2
1100	D	D	D	A	VREF+	VREF-	A	A	AN3	AN2	3 / 2
1101	D	D	D	D	VREF+	VREF-	A	A	AN3	AN2	2 / 2
1110	D	D	D	D	D	D	D	A	VDD	VSS	1 / 0
1111	D	D	D	D	VREF+	VREF-	D	A	AN3	AN2	1 / 2

A = Analog input D = Digital I/O
C/R = # of analog input channels / # of A/D voltage references

Legend:			
R = Readable bit	W = Writable bit	U = Unimplemented bit, read as ‘0’	
- n = Value at POR	’1’ = Bit is set	’0’ = Bit is cleared	x = Bit is unknown

Note: On any device RESET, the port pins that are multiplexed with analog functions (ANx) are forced to be an analog input.

© 2002 Microchip Technology Inc.

FIGURE 17-4: A/D RESULT JUSTIFICATION

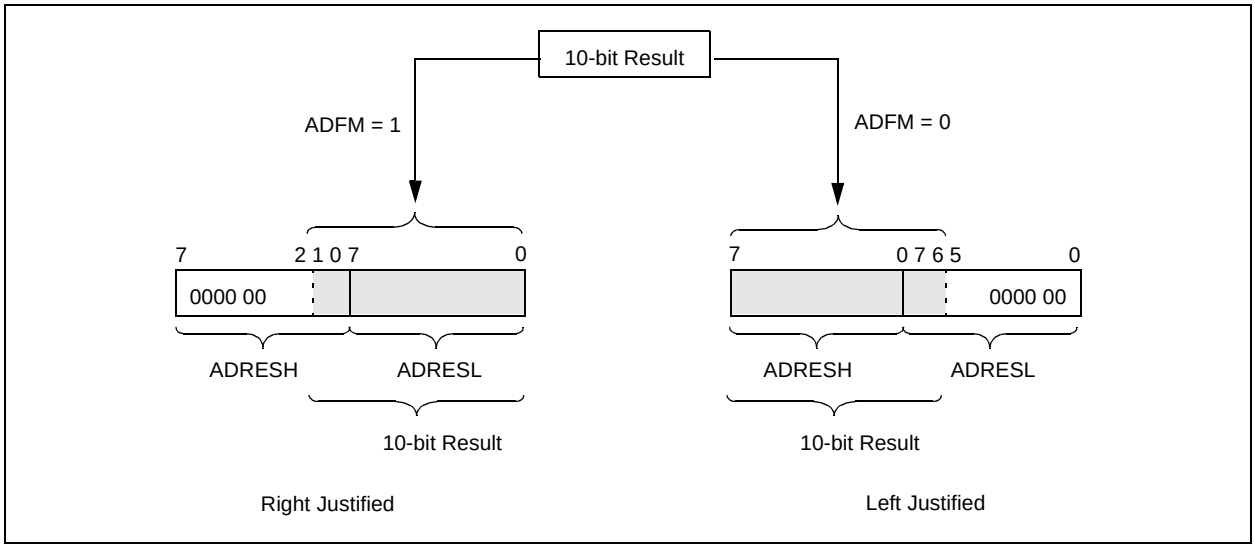

Name	Bit 7	Bit 6	Bit 5	Bit 4	Bit 3	Bit 2	Bit 1	Bit 0	Value on POR, BOR	Value on All Other RESETS
INTCON	GIE/ GIEH	PEIE/ GIEL	TMR0IE	INT0IE	RBIE	TMR0IF	INT0IF	RBIF	0000 000x	0000 000u
PIR1	PSPIF(1)	ADIF	RCIF	TXIF	SSPIF	CCP1IF	TMR2IF	TMR1IF	0000 0000	0000 0000
PIE1	PSPIE(1)	ADIE	RCIE	TXIE	SSPIE	CCP1IE	TMR2IE	TMR1IE	0000 0000	0000 0000
IPR1	PSPIP(1)	ADIP	RCIP	TXIP	SSPIP	CCP1IP	TMR2IP	TMR1IP	0000 0000	0000 0000
PIR2	—	—	—	EEIF	BCLIF	LVDIF	TMR3IF	CCP2IF	---0 0000	---0 0000
PIE2	—	—	—	EEIE	BCLIE	LVDIE	TMR3IE	CCP2IE	---0 0000	---0 0000
IPR2	—	—	—	EEIP	BCLIP	LVDIP	TMR3IP	CCP2IP	---1 1111	---1 0000
ADRESH	A/D Result Register								xxxx xxxx	uuuu uuuu
ADRESL	A/D Result Register								xxxx xxxx	uuuu uuuu
ADCON0	ADCS1	ADCS0	CHS2	CHS1	CHS0	GO/$\overline{\text{DONE}}$	—	ADON	0000 00-0	0000 00-0
ADCON1	ADFM	ADCS2	—	—	PCFG3	PCFG2	PCFG1	PCFG0	---- -000	---- -000
PORTA	—	RA6	RA5	RA4	RA3	RA2	RA1	RA0	--0x 0000	--0u 0000
TRISA	—	PORTA Data Direction Register							--11 1111	--11 1111
PORTE	—	—	—	—	—	RE2	RE1	RE0	---- -000	---- -000
LATE	—	—	—	—	—	LATE2	LATE1	LATE0	---- -xxx	---- -uuu
TRISE	IBF	OBF	IBOV	PSPMODE	—	PORTE Data Direction bits			0000 -111	0000 -111

Legend: x = unknown, u = unchanged, - = unimplemented, read as '0'. Shaded cells are not used for A/D conversion.
Note 1: The PSPIF, PSPIE and PSPIP bits are reserved on the PIC18F2X2 devices; always maintain these bits clear.

Notas convertidor DA AD5310

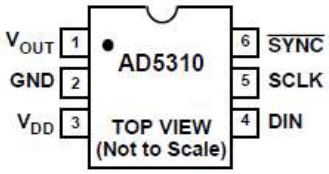

▪ Es un convertidor de 10 bits

▪ La comunicación con el convertidor DA se realiza en serie (bus SPI)

▪ $t_{settling\ time} = 8\mu seg$

▪ $V_{DD} \in [2.7V, 5.5V]$

▪ $V_{REF+} = V_{DD} = 5V$ (en ISIS) $[V_{REF-} = 0]$

▪ $V_{OUT} = \dfrac{V_{DD} \cdot D}{1023}$ [D es el valor del dato a convertir y V_{out} es la tensión que aparece en la salida del DAC al convertir el valor D]

▪ $\overline{SYNC}$: hay que poner a 0 este terminal para que el DAC reciba un paquete con un dato

▪ Con cada dato de 10 bits que haya que enviarle al D/A para ser convertido en una tensión hay que crear un paquete de 16 bits. En un paquete, además de los 10 bits correspondientes a un dato, se incluyen 2 bits de control, tal como se indica a continuación:

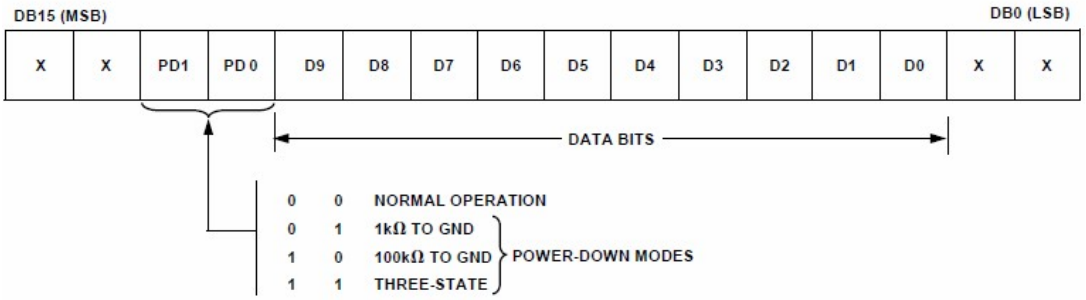

▪ Primero deben enviarse los 8 bits más significativos del paquete de 16 bits y a continuación deben enviarse los 8 bits menos significativos (*big endian*). El envío de los paquetes al DAC se realiza por SPI.

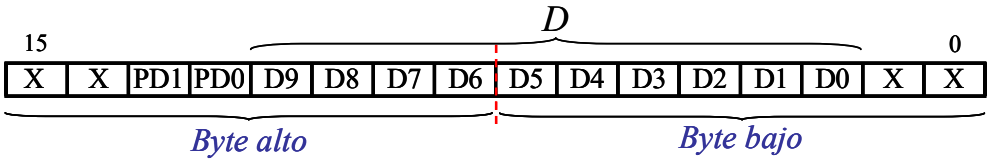

▪ Para configurar y poner en funcionamiento el módulo SPI del PIC18F452 hay que ejecutar la función SPI1_Init()

▪ Antes de que el µC le envíe un paquete al DAC, tiene que poner previamente el terminal *SYNC* del convertidor DA a 0

▪ Para enviar un valor (*alfa*) de 8 bits por SPI se utiliza la función: SPI1_Write(*alfa*);

▪ Una vez que el convertidor DA ha recibido un paquete (con un dato de 10 bits) inicia la conversión del dato enviado en dicho paquete.

Notas sobre las funciones del compilador de Mikroelektronika para utilizar un LCD

Lcd_Init(); // para configurar y poner en funcionamiento el LCD

Lcd_Cmd(_Lcd_Clear); // para borrar la pantalla
…
Lcd_Cmd(_Lcd_Cursor_Off); // para que no se vea el cursor
…
Lcd_Out(1,3,"Hola"); // para mostrar Hola en la pantalla
…
Lcd_Chr(2,3,'i'); // para mostrar el carácter i en la pantalla

Conversión de números a cadenas de caracteres (datos extraídos de la ayuda del compilador)

```
unsigned short t = 24;
char txt[4];
…
ByteToStr(t,txt);
-----------------------------
short t = –24;
char txt[5];
…
ShortToStr(t,txt);
-----------------------------
unsigned int t = 437;
char txt[6];
…
WordToStr(t,txt);
```

```
int j = –4220;
char txt[7];
…
IntToStr(j,txt);
-----------------------------
float t = –374.2;
char txt[15];
…
FloatToStr(t,txt);
-----------------------------
```

Ejemplos de conversiones entre tipos de datos en VHDL

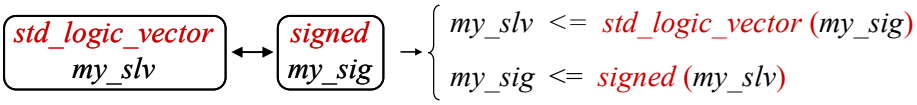

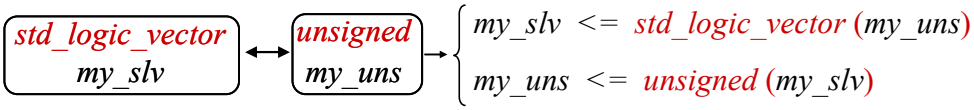

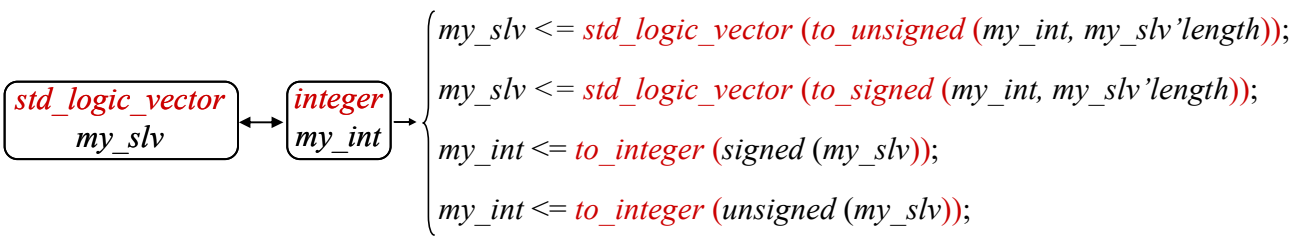

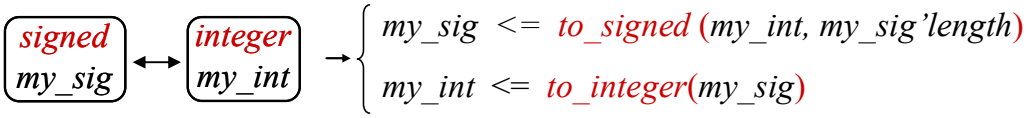

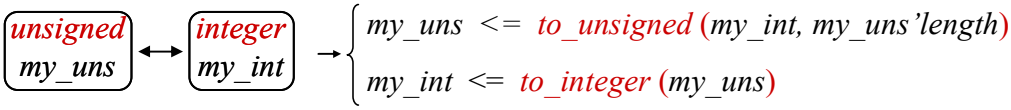

```
señal <= valor_1 when condición_1 else
         valor_2 when condición_2 else
         …
         valor_n when condición_n else
         valor_m;
```

```
if (condición_1) then
    instrucciones secuenciales;
elsif (condición_2) then
    instrucciones secuenciales;
…
elsif (condición_n) then
    instrucciones secuenciales;
else
   instrucciones secuenciales;
end if;
```

```
for i in α to β loop
  instrucciones secuenciales;
end loop;
```

```
with aux select
 control <= valor_1  when  λ1,
            valor_2  when  λ2,
            …
            valor_n  when  others;
```

```
case alfa is
  when valor_1a | valor_1b =>
      instrucciones secuenciales;
  when valor_2a | valor_2b =>
      instrucciones secuenciales;
  …
  when others => null;
end case;
```

```
while condición loop
 instrucciones secuenciales;
end loop;
```